Innolume GmbH
Konrad-Adenauer-Allee 11
44263 Dortmund, Germany

Specification

LDD-14pin-2A

All-in-one Laser Diode Driver

Features:

- Self-contained enclosure combining and incorporating:
  - Device current driver (2A)
  - Device TEC driver (3A)
  - 14-pin or 10-pin (optional) butterfly device mount with only output port (**LD**/**SLD**) or with input/output ports (**SOA**)
  - Control electronics and firmware
- USB interface
- External analog modulation capability (up to 500kHz)
- Software with graphical user interface (GUI)
- Stabilization modes: constant current and constant optical power
- Stand-alone operation via built-in keypad and display
- Provided with Type I (installed), Type II and custom pin out routing boards
- Ready-to-use with mounted LD/SLD/SOA (optional)

Output parameters

25°C

Parameter		Min.	Typ.	Max.	Unit
Current (3 ranges)*	*1 range:*	0.015		0.5	A
	2 range:	0.03		1	
	3 range:	0.06		2	
Compliance voltage				4.8	V
Photodiode current (5 ranges)*		5		5000	µA
TEC current		-3		3	A

** - user selectable via provided PC Software*

Input parameters

Parameter	Min.	Typ.	Max.	Unit
Voltage	4.8	5	5.2	V
Current			5	A

Modulation

Parameter	Min.	Typ.	Max.	Unit
Bandwidth @ -3dB			500	kHz
Analog input voltage	0		5	V
Analog input impedance		1		MOhm

Connection

Interfaces	USB

Mechanical

Parameter		Unit
Size (WxDxH)	135 x 200 x 54	mm

Conditions

Parameter	Min.	Typ.	Max.	Unit
Operating temperature	10		50	°C
Storage temperature	0		70	°C
Humidity, Non-condensing			95	%

Innolume GmbH
Konrad-Adenauer-Allee 11
44263 Dortmund, Germany

Package contents

Items	Qty, pcs
1. Laser diode driver	1
2. AC/DC power adapter (input: 100-240V ~ 50/60 Hz 1.5A; output: 5.0V 6.0A 30W)	1
3. USB A/B cable	1
4. Heatsink for BTF(14pin) or SOA mount	1
5. BTF sockets with clamp	2
6. Pin out routing boards (Type II and custom)	2
7. LDD side mount parts	2
8. Screws set	1

Dimensions (in mm)

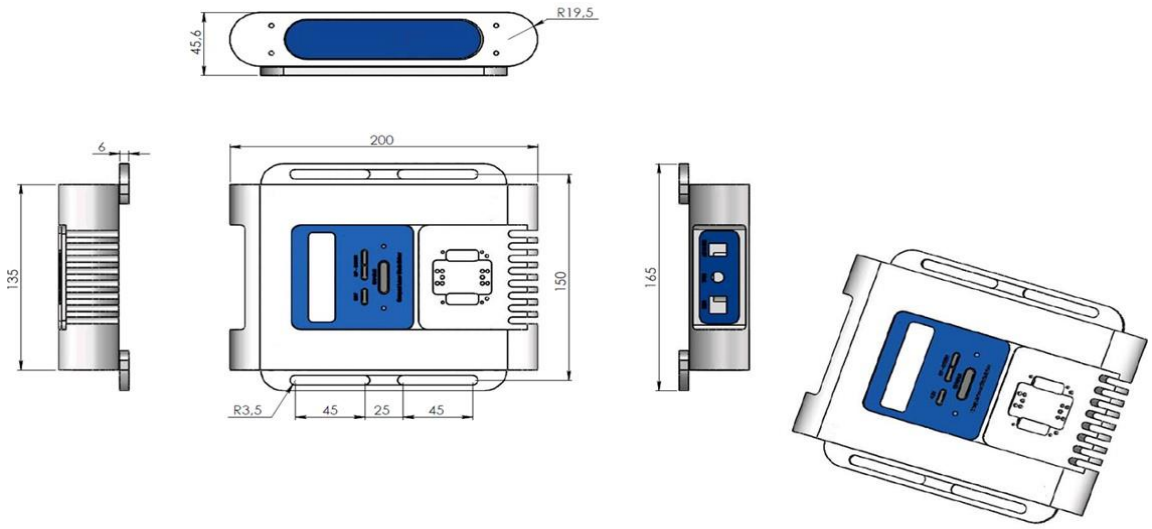

Safety and Operating Instructions

MUST - It's highly recommended to assemble the Laser Diode Driver (LDD) case by screws to optical table or some other solid metal surface to prevent device overheating. If it's not possible, a forced blow-off of driver case can help.
WARNING - Laser diodes are susceptible to damage as a result of electrostatic discharge (ESD). Ensure that you take proper precautions when handling these devices.
WARNING - Depending on the type of laser used, the laser diode modules may deliver several hundreds of mW of invisible laser radiation. To avoid injuries follow the laser diode manufacturer and standard laser safety instructions.
WARNING - Always power off the LDD before replacing the laser diode. Configure the LDD parameters with the provided PC Software before operating.
WARNING - Always set limits before operation with laser diode modules not to exceed absolute maximum ratings. Exposure to maximum ratings for extended period of time or exposure to more than one maximum rating may cause damage or affect the reliability of the device.

NOTE: Innolume product specifications are subject to change without notice

Revision history

Rev	Date	Description
01	8 Aug 2023	Initial issue of the document